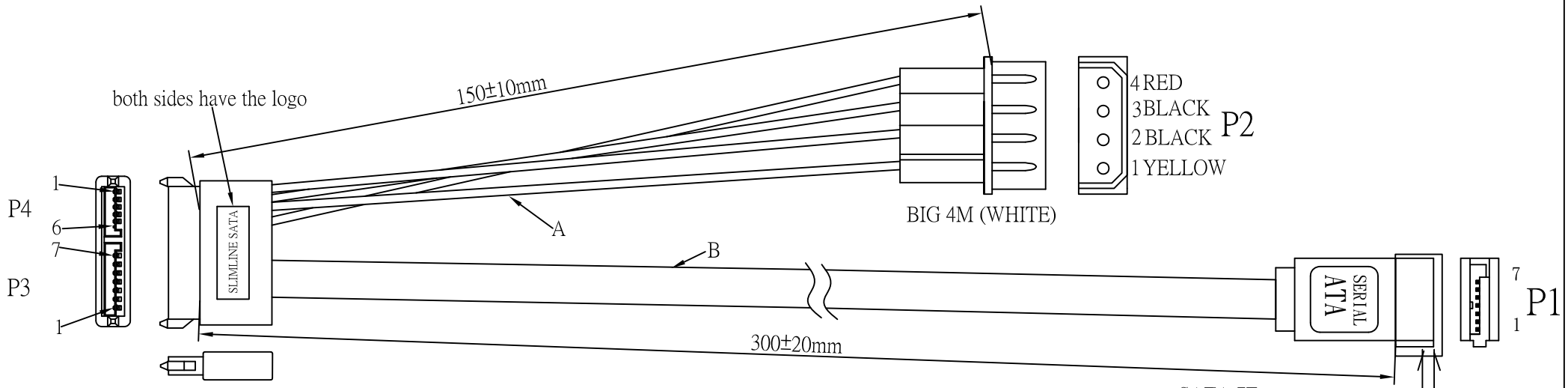

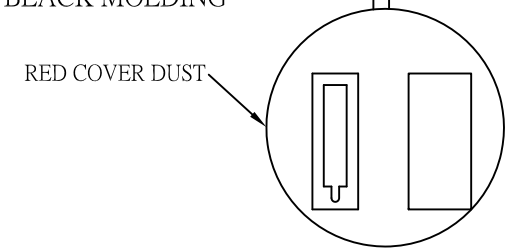

NOTE：

1. CABLE:A:UL 1007 22AWG,BLACK*2PCS/RED*1PCS/YELLOW*1PCS COLOR,PVC JACKET.
   B:UL2725,(26#*2C+AL/MY+D*2)*2F,OD=2.4*8.0mm,RED FLAT CABLE,PVC JACKET.
2. LENGTH:150mm/300mm
3. CONNECTOR:SATA(6+7)FEMALE*1PCS(BLACK),SATA7F*1PCS(BLACK),BIG 4M*1PCS(WHITE)
4. CONTACTS:

P2	2	3	1	4
P4	1	2	3	5
	BLACK	BLACK	YELLOW	RED

P1	1+4+7	2	3	5	6
P3	1+4+7	2	3	5	6

5. OPEN/SHORT TEST: 100% TEST.
   CONTACT RES:10Ω(MAX)
   INSULATION:5MΩ/MIN.
   HI-POT TEST:DC300V/10MS.

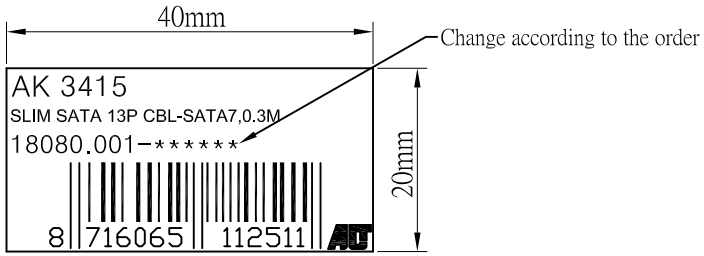

STICKER

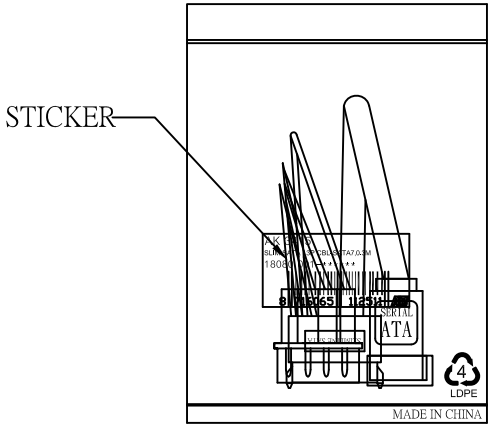

1PCS/PE BAG(0.06*100*200+STICKER

RoHS Compliant

Company	IBV	Goods Code		Draw	FC001 WJF	Date	2010.03.18	D		
ITEM NO.	AK3415	Drawing Evidence:		Check		Date		C	AMEND TYPING MISTAKE	20111202 Kobe
Goods NO.				Approval		Date		B	Adding packaging info	100419(cy)
Original NO.	S-*******	Unit(mm)						VER. A	REVISE	Date