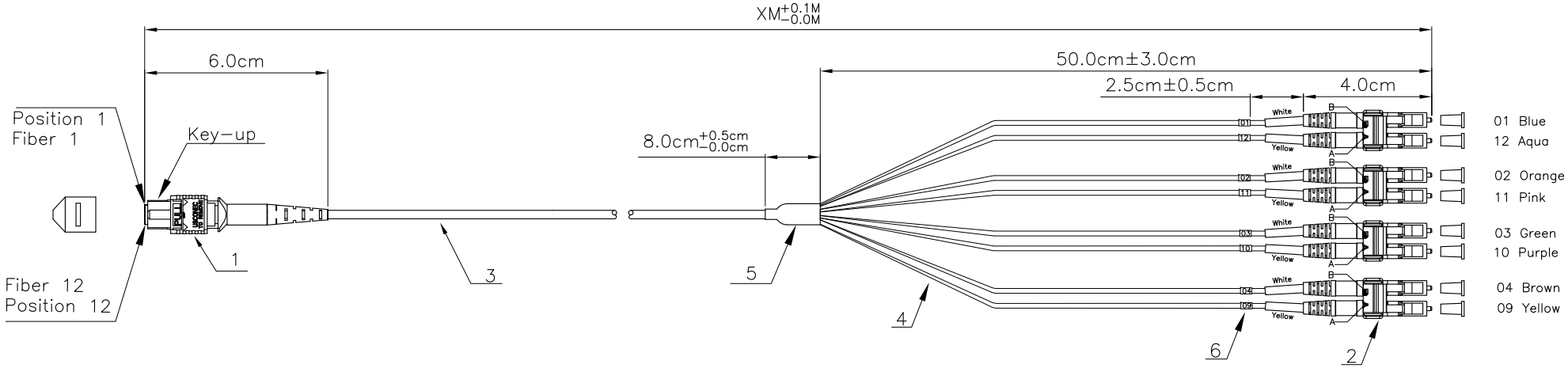

Specification :
Material :
1. MTP Connector : Female

Mode	MT Ferrule	Housing	Boot	Cap
SM Low Loss	12 Fibers SM Low Loss Black(PPS)	Yellow(PBT)	Black(TPR)	Black(TPR)

2. LC Short boot Connector :

Mode	Ferrule	Housing	Clip	Boot	Tube	Cap
SM Low Loss	Zirconia(ø1.25mm)	Blue(PC)	Blue(PP)	White(TPE)	White/Yellow(PVC)	White(PE)

3. Cable Type : 8C ø3.0mm Round Cable
4. Tubing Type : ø2.0mm Tubing

Category	Cable O.D.	Tubing O.D.	Jacket Material	Color
G.657A2(9/125um)	ø3.0mm	ø2.0mm	LSFRZH	Yellow

5. Heat Shrink Tubing Length : 8.0cm
6. Marking Tubing Length : 1.0cm

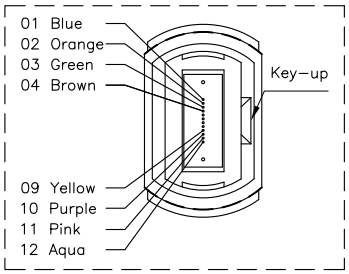

Connector Section (SCALE 2/1)

Part Number	Length
RL7861	1M
RL7862	2M
RL7863	3M
RL7865	5M

Performance :
a. Insertion Loss & Return Loss :

	SM Low Loss
IL(MTP)	APC<0.35 dB
IL(LC)	UPC<0.15 dB
RL(MTP)	APC>60 dB
RL(LC)	UPC>55 dB

b. Fiber Overcut(MTP) : 1.0~3.0um
c. Fiber Extention(LC): −0.05um < H < +0.05um
d. ø1.25mm Ferrule End−face Radius: 7 < R < 25mm
e. Apex Offset : < 50um
f. Insertion Loss will be Increased after 500 mating: 0.2 dB Max
g. Operating Temperature: −20°C to +70°C
h. Storage Temperature: −40°C to +80°C

"#": Matching DIM.
"*": Important DIM.
Others General DIM.

GENERAL TOLERANCE OF DIMENSIONS

X.XXX	±0.005
X.XX	±0.05
X.X	±0.1

DRAWING	29.JAN.2018	YMN	AC
CHECK	29.JAN.2018	DAY	
APPROVAL	29.JAN.2018	JAIMY	
	DATE	NAME	ITEM NO.:
SCALE 1/2(A4)	UNIT mm		DES.: Harness OS2 8C 12F MTP(F) to 4xDX LC Short Boot Low Loss for QSFP
DRAWING NO.	Harness OS2 8C 12F MTP(F) to 4xDX LC Short Boot Low Loss for QSFP(S01)		
DRAWING CLASSIFICATION	S	SHEET 1 OF 1	01