MOLDING			
AM INER	JAM787	BM INER	JAM788
AM OUTER	**HAM457 JAM773**	BM OUTER	HAM459

DATE	REV.	REVISION	DRAFTING	CHECKED
2014.11.20	1.0	NEW	LJW	CQ

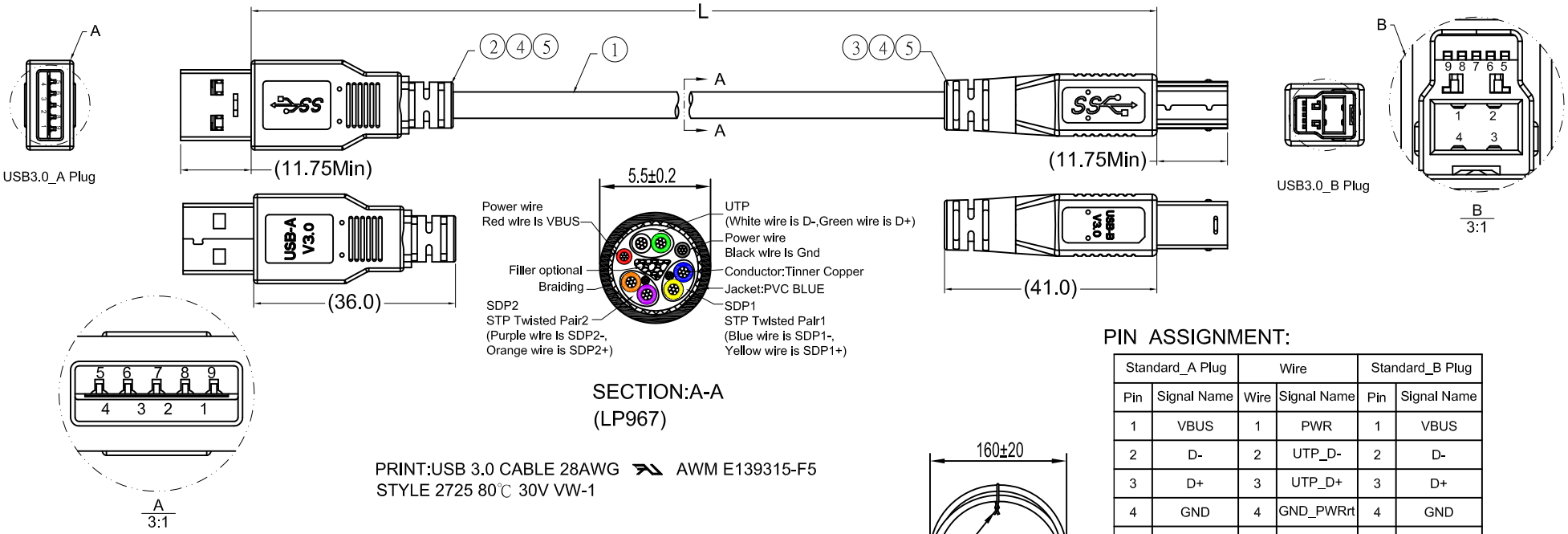

SECTION:A-A
(LP967)

PRINT:USB 3.0 CABLE 28AWG AWM E139315-F5
STYLE 2725 80℃ 30V VW-1

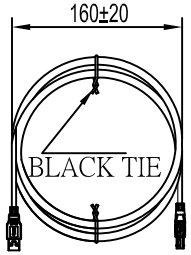

PIN ASSIGNMENT:

Standard_A Plug		Wire		Standard_B Plug	
Pin	Signal Name	Wire	Signal Name	Pin	Signal Name
1	VBUS	1	PWR	1	VBUS
2	D-	2	UTP_D-	2	D-
3	D+	3	UTP_D+	3	D+
4	GND	4	GND_PWRrt	4	GND
5	SSRX-	5	SDP1-	5	SSTX-
6	SSRX+	6	SDP1+	6	SSTX+
7	GND_Drain	7 ,10	SDP1_Drain SDP2_Drain	7	GND_Drain
8	SSTX-	8	SDP2-	8	SSRX-
9	SSTX+	9	SDP2+	9	SSRX+
Shell	Shield	Braid	Shield	Shell	Shield

NOTES:
1. ALL MATERIAL MEET THE ROHS COMPLIANT
2. 100% OPEN/SHORT/MISS WIRE TESTING
   INSULATION RESISTANCE: DC/250V,10MΩ MIN,0.01S
   WITHSTAND VOLTAGE: AC/250V 5mA FOR 0.1S.
   CONDUCTOR RESISTANCE:5Ω MAX.
3. L=3.0M Per Customer Request

ITEM	Length(mm)
SB 3016	500±20
SB 3017	1000±25
SB 3018	1500±30
SB 3019	2000±30
SB 0003	3000±30

No.	TITLE	DESCRIPTION	Q'TY
5	PVC	OVER MOLDING : 45P BLACK	A/R
4	PE	IN MOLDING : MG70 LDPE	A/R
3	CONN	USB3.0 B Male Plug, Shell Plated Nickel + Contact Gold Plated G/F	1 SET
2	CONN	USB3.0 A Male Plug, Shell Plated Nickel + Contact Gold Plated G/F	1 SET
1	CABLE	USB 3.0 CABLE 28AWG*[1P(7/0.127TC)+D.W(7/0.127TC)]*2+28AWG*1P(7/0.127TC) +28AWG*2C(7/0.127TC) +AL-MYLAR+BRAID(AL-Mg), BK PVC,OD5.5±0.2mm	AR

Material		Part Number		Note	***	3RD	

Unless specified on the drawing, tolerances are per the follows:

X.	±0.20	X°	±3
.X	±0.10	.X°	±0.3
.XX	±0.05		

DRAW. NO	GF-S140205	TITLE	USB 3.0 A/M TO B/M CABLE ASS"Y		
CUSTOMER					
CUST'R P/N	See Table	DRAW	LJW	DATE	2014.11.20
SCALE	NONE	CHECK		DATE	2014.11.20
UNIT	mm	APPROVED	CQ	SHEET	1 OF 1

MOLDING			
AM INER	JAM787	BM INER	JAM788
AM OUTER	**HAM457 JAM773**	BM OUTER	HAM459

DATE	REV.	REVISION	DRAFTING	CHECKED
2014.11.20	1.0	NEW	LJW	CQ

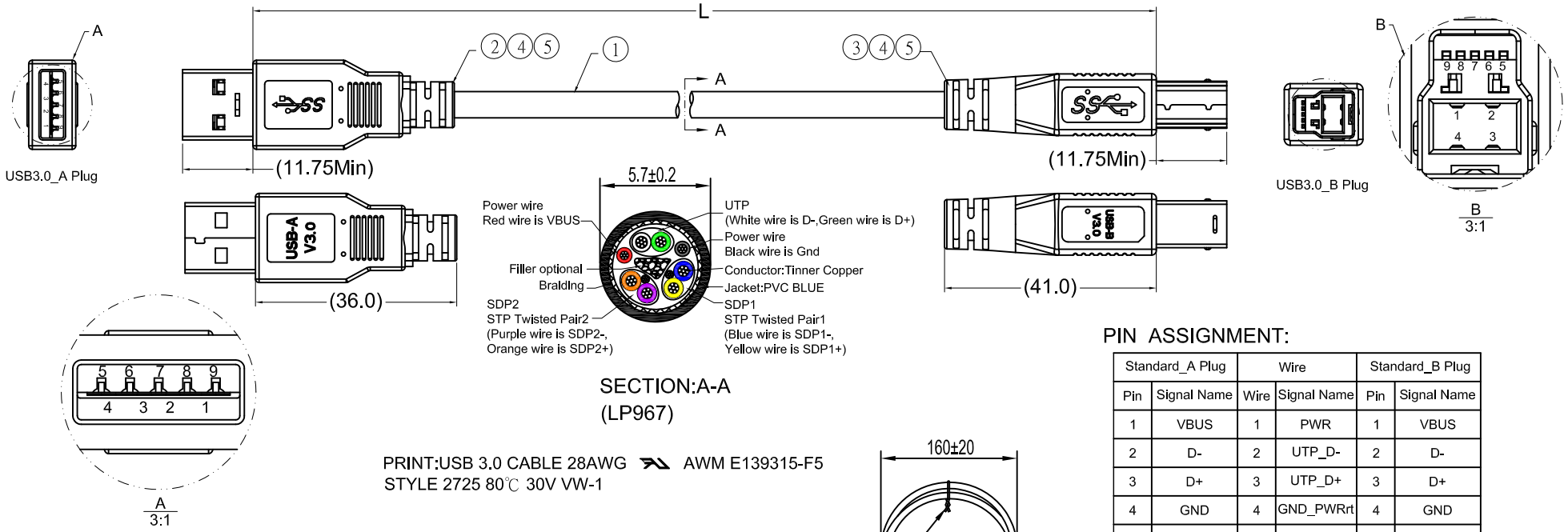

SECTION:A-A
(LP967)

PRINT:USB 3.0 CABLE 28AWG AWM E139315-F5
STYLE 2725 80℃ 30V VW-1

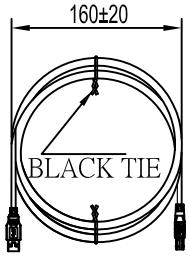

ITEM	Length(mm)
SB 3020	3000±30
SB 3021	5000±50
SB 0004	5000±50

PIN ASSIGNMENT:

Standard_A Plug		Wire		Standard_B Plug	
Pin	Signal Name	Wire	Signal Name	Pin	Signal Name
1	VBUS	1	PWR	1	VBUS
2	D-	2	UTP_D-	2	D-
3	D+	3	UTP_D+	3	D+
4	GND	4	GND_PWRrt	4	GND
5	SSRX-	5	SDP1-	5	SSTX-
6	SSRX+	6	SDP1+	6	SSTX+
7	GND_Drain	7 ,10	SDP1_Drain SDP2_Drain	7	GND_Drain
8	SSTX-	8	SDP2-	8	SSRX-
9	SSTX+	9	SDP2+	9	SSRX+
Shell	Shield	Braid	Shield	Shell	Shield

NOTES:
1. ALL MATERIAL MEET THE ROHS COMPLIANT
2. 100% OPEN/SHORT/MISS WIRE TESTING
   INSULATION RESISTANCE: DC/250V,10MΩ MIN,0.01S
   WITHSTAND VOLTAGE: AC/250V 5mA FOR 0.1S.
   CONDUCTOR RESISTANCE:5Ω MAX.

No.	TITLE	DESCRIPTION	Q'TY
5	PVC	OVER MOLDING : 45P BLACK	A/R
4	PE	IN MOLDING : MG70 LDPE	A/R
3	CONN	USB3.0 B Male Plug, Shell Plated Nickel + Contact Gold Plated G/F	1 SET
2	CONN	USB3.0 A Male Plug, Shell Plated Nickel + Contact Gold Plated G/F	1 SET
1	CABLE	USB 3.0 CABLE 28AWG*[1P(7/0.127TC)+D.W(7/0.127TC)]*2+28AWG*1P(7/0.127TC) +24AWG*2C(7/0.196TC) +AL-MYLAR+BRAID(AL-Mg), BK PVC,OD5.7±0.2mm	AR

Material		Part Number		Note	***	3RD	

Unless specified on the drawing, tolerances are per the follows:

X.	±0.20	X°	±3
.X	±0.10	.X°	±0.3
.XX	±0.05		

DRAW. NO	GF-S140206	TITLE	USB 3.0 A/M TO B/M CABLE ASS"Y		
CUSTOMER					
CUST'R P/N	See Table	DRAW	LJW	DATE	2014.11.20
SCALE	NONE	CHECK		DATE	2014.11.20
UNIT	mm	APPROVED	CQ	SHEET	1 OF 1